Mercury™ MP2500 Intelligent Controller

Key Benefits

Open Architecture:
High performance, reliable platform enables use of hardware with Mercury OEM partners' software solutions.

Edge Processing:
Advanced processing capabilities allow for custom applications to run in the controller, exponentially expanding the platform's processing possibilities at the edge.

Enhanced Cybersecurity:
Secure boot CPU, crypto chip and data at rest encryption provide a layered security approach to protect sensitive data.

Business Continuity:
New processor part of multi-year longevity program, dual footprint circuit designs and the same reliable LP/EP interface and footprint.

The new Mercury MP Intelligent Controllers provide a bridge between today's urgent security needs and tomorrow's emerging realities. Featuring secure world processing within a trusted execution environment and a future-ready, on-device application environment to drive advanced enterprise strategies with sophisticated programs and analytics adjacent to the door. With unmatched cybersecurity, robust reliability, and an open architecture, the MP controller infrastructure is ready for the challenges of today and well into the future.

The MP2500 is a powerful intelligent controller with native network support and is scalable to 64 doors/openings. Built on the Mercury platform, the intelligent controller uses an on-board Ethernet port to connect to cloud or server based access control hosts. The intelligent controller performs access control, alarm management and scheduled operations — all in a single package.

Built on the Mercury platform, the intelligent controller can connect to cloud or server-based hosts and can operate independently to perform access control functions. The development environment allows partners to enhance their solutions with custom applications; applications can be loaded directly onto a controller for scalable, modern integrations.

For partners seeking an empowering, comprehensive and open access control platform that is also reliable and cybersecure, the MP2500 is the clear solution. It delivers a complete security and access control solution, an innovative edge processing and development environment, interoperability and data security.



Highlights

Security and Network

- IPv4/v6
- Host communications protected by TLS 1.2/1.3 or AES-256/128
- Controller/IO Expansion connection protected by AES
- Generate and load custom peer certificates for TLS
- Port based network access control using 802.1X
- FIPS 140-3 user of OpenSSL

Local Access Control Processing

- Encrypted database with configurable sizing
- Supports up to 19 digital card numbers
- Supports PIN codes up to 15 digits
- Up to 255 access levels per cardholder
- Card issue code (up to 32 bits), ADA and VIP flags; PIV (75 bits); Smart Card (200 bits)

Third party integration supported

- Wireless locks
- Power supply alerts and events

SPECIFICATIONS

Mercury MP2500 Intelligent Controller	
Access Control	600,000 cardholder capacity 500,000 transaction buffer Supports up to 2 RS-485 IO protocols 255 access levels per cardholder Cardholder - 19 Digit (64 Bit) User ID with 15 digit PIN MAX Activation/Deactivation If/Then macro capabilities Anti-passback support Nested, area, hard, soft and timed forgiveness Adjustable cardholder capacity Supports up to 1024 inputs or 1024 outputs
Door Control	Does not natively support any readers or openings. Supports up to 32 RS-485 expansion modules for a maximum of 64 readers and openings.
General	
Primary Power	12 to 24 VDC ± 10 %, 500 mA maximum (reader and USB ports not included)
Micro USB Port	5 VDC, 500 mA maximum (add 270 mA to primary power current)
Battery	Memory/Clock Backup: Super Capacitor (10 hours). 3 Volt Lithium, type BR/CR2032, slot available for additional capacity. Battery not included.
microSD Card	Format: microSD or microSDHC; 2GB to 8GB
Host Communication	Ethernet: 10-BaseT/100Base-TX and Micro USB port (2.0) with optional adapter: pluggable model USB2-OTGE100
Serial I/O Device	Two each: 2-wire RS-485, 2,400 to 115,200 bps, asynchronous, half-duplex, 1 start bit, 8 data bits, and 1 stop bit
Inputs	Two unsupervised dedicated for cabinet tamper and UPS fault monitoring

Cable Requirements	
Header	Alarm Input
Data	1 twisted pair, 30 ohms maximum
Power	1 twisted pair, 18 to 16 AWG
Ethernet	CAT-5, minimum
I/O Devices RS-485	1 twisted pair, shield, 120 ohm impedance, 24 AWG. 4,000 ft. (1,219 m) maximum cable length
Environmental	
Temperature	-55 to +85 °C, storage, 0 to +70 °C, operating
Humidity	5 to 95% RHNC
Mechanical	
Dimensions	5 in. (127 mm) W x 6 in. (152.4 mm) L x 1 in. (25 mm) H
Weight	4.1 oz. (115 gm) nominal, board only
Compliance and Warranty	
Product Compliance	UL 294 Recognized, FCC Part 15 Class A, CE Compliant, RoHS (2011/65/EU & 2015/863), EU REACH (1907/2006), California Proposition 65, NIST Certified Encryption
Warranty	The product is warranted free from defects in material and workmanship under normal use and service with proper maintenance for one year from the date of factory shipment.

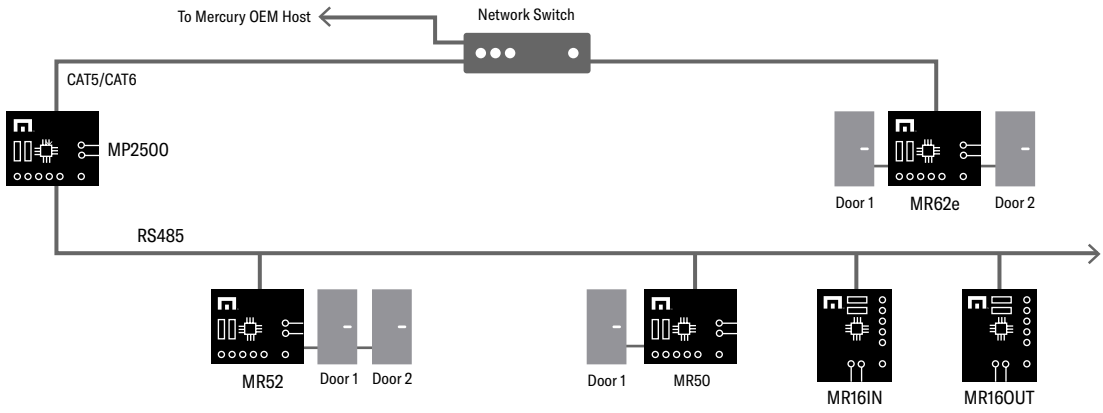

part of HID

© 2026 HID Global Corporation, part of ASSA ABLOY. All trademarks are owned by HID Global Corporation, ASSA ABLOY and/or their respective owners and may not be used without permission. All rights reserved.
2026-10-19-pacs-mercury-MP2500-ds-en