Mercury™ MP1502 Intelligent Controller

Key Benefits

Open Architecture:
High performance, reliable platform enables use of hardware with Mercury OEM partners' software solutions.

Edge Processing:
Advanced processing capabilities allow for custom applications to run in the controller, exponentially expanding the platform's processing possibilities at the edge.

Enhanced Cybersecurity:
Secure boot CPU, crypto chip and data at rest encryption provide a layered security approach to protect sensitive data.

Business Continuity:
New processor part of multi-year longevity program, dual footprint circuit designs and the same reliable LP/EP interface and footprint.

The new Mercury MP Intelligent Controllers provide a bridge between today's urgent security needs and tomorrow's emerging realities. Featuring Secure world processing within a trusted execution environment and a future-ready, on-device application environment to drive advanced enterprise strategies with sophisticated programs and analytics adjacent to the door. With unmatched cybersecurity, robust reliability, and an open architecture, the MP controller infrastructure is ready for the challenges of today and well into the future.

The MP1502 supports 2-4 card readers for controlling two connected doors, which can expand to up to 64 doors/openings. It also supports keypads, biometric readers, OSDP, Wiegand, clock and data, magnetic stripe, F/2F and supervised F/2F reader technologies. With enhanced processing, memory and component continuity, the MP1502 includes improved cybersecurity measures like secure boot, TLS 1.3, and FIPS 140-3 use of OpenSSL. System configuration and setup are provided through Mercury OEM partner software applications.

Built on the Mercury platform, the intelligent controller can connect to cloud or server-based hosts and can operate independently to perform access control functions. The development environment allows partners to enhance their solutions with custom applications; applications can be loaded directly onto a controller for scalable, modern integrations.

For partners seeking an empowering, comprehensive and open access control platform that is also reliable and cybersecure, the MP1502 is the clear solution. It delivers a complete security and access control solution, an innovative edge processing and development environment, interoperability and data security.



Highlights

Security and Network

- IPv4/v6
- Host communications protected by TLS 1.2/1.3 or AES-256/128
- Controller/IO Expansion connection protected by AES
- Generate and load custom device and peer certificates in support of mTLS
- Port based network access control using 802.1X
- FIPS 140-3 user of OpenSSL

Local Access Control Processing

- Supports multiple card formats, paired and alternate readers, elevator, turnstile and biometric devices
- Anti-passback support (area, reader and time based)
- Programmable keypad user commands
- Threat level and operating mode
- Ability to power cycle each reader port individually

Third Party Integration Supported

- Wireless locks
- Power supply alerts and events

SPECIFICATIONS

Mercury MP1502 Intelligent Controller	
Access Control	240,000 cardholder capacity 500,000 transaction buffer Supports total of 1 RS-485 IO protocols 255 access levels per cardholder Cardholder - 19 Digit (64 Bit) User ID with 15 digit PIN MAX Activation/Deactivation If/Then macro capabilities Anti-passback support Nested, area, hard, soft and timed forgiveness Adjustable cardholder capacity Supports up to 520 inputs or 516 outputs
Door Control	Natively supports up to 4 readers and 2 openings and can support up to 32 additional RS-485 expansion modules for a maximum of 64 readers and openings.
General	
Primary Power	12 to 24 VDC ± 10 %, 500 mA maximum (reader and USB ports not included)
Reader Port	600 mA maximum (add 600 mA to primary power current)
Micro USB Port	5 VDC, 500 mA maximum (add 270 mA to primary power current)
Battery	Memory/Clock Backup: Super Capacitor (10 hours). 3 Volt Lithium, type BR/CR2032, slot available for additional capacity. Battery not included.
microSD Card	microSD or microSDHC; 2GB to 8GB
Host Communication	Ethernet: 10-BaseT/100Base-TX and USB port (2.0) with optional adapter: pluggable model USB2-OTGE100
Serial I/O Device	2-wire RS-485, 2,400 to 115,200 bps, asynchronous, half-duplex, 1 start bit, 8 data bits, and 1 stop bit
Inputs	Eight unsupervised/supervised, standard EOL: 1k/1k ohm, 1%, ¼ watt. Two unsupervised dedicated for cabinet tamper and UPS fault monitoring.
Output Relays	Four relays, Form C, NO 5 A @ 30 VDC resistive, NC 3 A @ 30 VDC resistive

Reader Interface	
Reader Power	12-24 VDC +/- 10% regulated, 600 mA maximum.
Data Inputs	TTL compatible, F/2F or 2-wire RS-485
RS-485 Mode	9,600 to 115,200 bps, asynchronous, half-duplex, 1 start bit, 8 data bits, and 1 stop bit. Maximum cable length: 2000 ft. (609.6 m)
LED Output	TTL levels, high>3 V, low<0.5 V, 5 mA source/sink maximum
Buzzer Output	Open collector, 12 VDC open circuit maximum, 40 mA sink maximum
Cable Requirements	
Power and Relays	1 twisted pair, 18 to 16 AWG
Ethernet	CAT-5, minimum
Reader TTL	6-conductor, 18 AWG, 500 feet (150 m) maximum
Reader F/2F	4-conductor, 18 AWG, 500 feet (150 m) maximum
Reader RS-485	1 twisted pair, shielded, 120 ohm impedance, 24 AWG, 2,000 ft. (610 m) max.
I/O Devices RS-485	1 twisted pair with drain wire and shield, 120 ohm impedance, 24 AWG, 4,000 ft. (1,219 m) maximum
Alarm Input	1 twisted pair, 30 ohms maximum typically 22 AWG @ 1000 ft. (304.8 m) maximum
Environmental	
Temperature	-55 to +85 °C, storage, 0 to +70 °C, operating
Humidity	5 to 95% RHNC
Mechanical	
Dimensions	8 in. (203.2 mm) W x 6 in. (152.4 mm) L x 1 in. (25 mm) H
Weight	9 oz. (255 g) nominal, board only
Compliance and Warranty	
Product Compliance	UL 294 Recognized, FCC Part 15 Class A, CE Compliant, RoHS (2011/65/EU & 2015/863), EU REACH (1907/2006), California Proposition 65, NIST Certified Encryption
Warranty	The product is warranted free from defects in material and workmanship under normal use and service with proper maintenance for one year from the date of factory shipment.

1 For UL, the Power Sourcing Equipment (PSE) such as a PoE or PoE+ enabled network switch and or PoE or PoE+ power injectors must be UL Listed under UL 294B

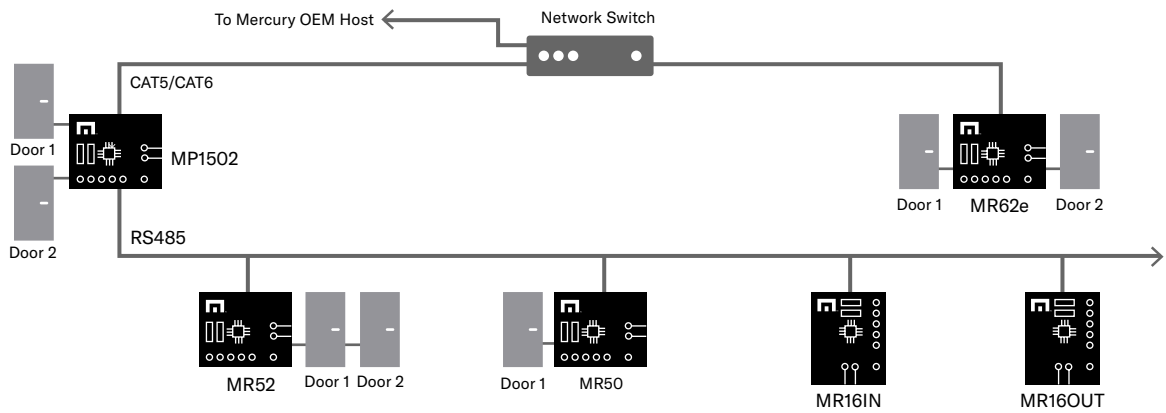

part of HID

© 2026 HID Global Corporation, part of ASSA ABLOY. All trademarks are owned by HID Global Corporation, ASSA ABLOY and/or their respective owners and may not be used without permission. All rights reserved. 2026-10-19-pacs-mercury-MP1502-ds-en