Mercury™ MP1501 Intelligent Controller

Key Benefits

Open Architecture:
High performance, reliable platform enables use of hardware with Mercury OEM partners' software solutions.

PoE+ Powered:
A single PoE+ network connection provides network connectivity, along with power for the controller, reader, lock, and accessories, simplifying installations and removing the cost of traditional power supplies.

Enhanced Cybersecurity:
Secure boot CPU, crypto chip and data at rest encryption provide a layered security approach to protect sensitive data.

Business Continuity:
New processor part of multi-year longevity program, dual footprint circuit designs and the same reliable LP/EP interface and footprint.

The new Mercury MP Intelligent Controllers provide a bridge between today's urgent security needs and tomorrow's emerging realities. Featuring Secure world processing within a trusted execution environment and a future-ready, on-device application environment to drive advanced enterprise strategies with sophisticated programs and analytics adjacent to the door. With unmatched cybersecurity, robust reliability, and an open architecture, the MP controller infrastructure is ready for the challenges of today and well into the future.

The MP1501 is an edge-capable intelligent controller that is expandable up to eight downstream serial input/output modules or up to 16 MR62e network ready door controllers (for a total of 17 doors/openings). The feature-rich MP1501 provides OEMs with a small footprint, cost-effective dual card reader panel for controlling a single opening. Easy installation with Power-over-Ethernet Plus (PoE+) makes the high performance, Ethernet ready MP1501 a top choice for a single-door controller.

Built on the Mercury platform, the intelligent controller can connect to cloud or server-based hosts and can operate independently to perform access control functions. The development environment allows partners to enhance their solutions with custom applications; applications can be loaded directly onto a controller for scalable, modern integrations.

For partners seeking an empowering, comprehensive and open access control platform that is also reliable and cybersecure, the MP1501 is the clear solution. It delivers a complete security and access control solution, an innovative edge processing and development environment, interoperability and data security.

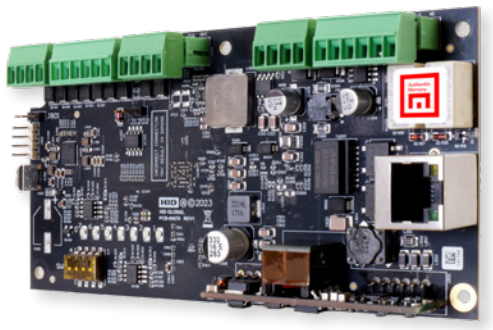

Highlights

Security and Network

- IPv4/v6
- Host communications protected by TLS 1.2/1.3 or AES-256/128
- Controller/IO Expansion connection protected by AES
- Generate and load custom device and peer certificates in support of mTLS
- Port based network access control using 802.1X
- FIPS 140-3 user of OpenSSL
- OSDP Secure Channel

Local Access Control Processing

- Supports multiple card formats, paired and alternate readers, elevator, turnstile and biometric devices
- Anti-passback support (area, reader and time based)
- Programmable keypad user commands
- Threat level and operating modes

IP-to-the-Door

- Install at door in 3-gang box
- Provides up to 1.25 A of power at door for reader, lock and more

SPECIFICATIONS

Mercury MP1501 Intelligent Controller	
Access Control	240,000 cardholder capacity 500,000 transaction buffer Supports total of 1 RS-485 IO protocol 255 access levels per cardholder Cardholder - 19 Digit (64 Bit) User ID with 15 digit PIN MAX Activation/Deactivation If/Then macro capabilities Anti-passback support Nested, area, hard, soft and timed forgiveness Adjustable cardholder capacity Supports up to 130 inputs and 130 outputs
Door Control	Natively supports up to 2 readers and 1 opening and can support up to 8 additional RS-485 expansion modules for a maximum of 17 readers and openings.
Power Input	PoE (12.95 W), compliant to IEEE 802.3af or PoE+ (25 W), compliant to IEEE 802.3at or 12 VDC +/- 10 %, 1.8 A maximum
Power Output	PoE: 12 VDC @ 625 mA including reader and AUX output * PoE+ or external 12 VDC: 12 VDC @ 1.25 A including reader and AUX output * * Excluding micro USB port
Micro USB Port	5 VDC maximum (deduct 270 mA from reader and Auxiliary Power output)
Battery	Memory/Clock Backup: Super Capacitor (10 hours)
Host Communication	Ethernet: 10-BaseT/100Base-TX
Inputs	Two unsupervised/supervised, Programmable End-of-Line resistors, 1k/1k ohm, 1 %, ¼ watt standard. One unsupervised input dedicated for cabinet tamper
Output Relays	Two relays: Form-C contacts: 2 A @ 30 VDC, resistive
Reader Interface	
Reader Power	12 VDC ± 10 %: PoE, PoE+ or local power supply, 600 mA maximum
Data Inputs	Reader port 1: TTL compatible, F/2F or 2-wire RS-485 Reader port 2: TTL compatible or F/2F
LED Output	TTL compatible, high > 3 V, low < 0.5 V, 5 mA source/sink maximum
Buzzer Output	Open collector, 12 VDC open circuit maximum, 40 mA sink maximum

Cable Requirements	
Header	I/O Devices RS-485
Data	1 twisted pair, shield. 120 ohm impedance, 24 AWG, 4,000 ft. (1,219 m) maximum
Power and Relays	1 twisted pair, 18 AWG (when using local 12 VDC power supply)
Ethernet	CAT-5, minimum
Reader TTL	6-conductor, 18 AWG, 500 ft. (152 m) maximum
Reader F/2F	4-conductor, 18 AWG, 500 ft. (152 m) maximum
Reader RS-485	1 twisted pair, shielded. 24 AWG, 120 ohm impedance, 2000 ft. (610 m) maximum
Alarm Input	1 twisted pair per input, 30 ohms maximum
Alarm Output	As required for the load
Environmental	
Temperature	Storage: -55° to 85° C Operating: 0° to 70° C
Humidity	5 to 95% RHNC
Mechanical	
Dimensions	5.5 in. (140 mm) W x 2.75 in. (70 mm) L x 0.96 in. (24 mm) H without bracket 5.5 in. (140 mm) W x 3.63 in. (92 mm) L x 1.33 in. (34 mm) H with bracket
Weight	3.6 oz. (103 g) without bracket 4.43 oz. (125.5 g) with bracket
Product Compliance	UL 294 Recognized1, FCC Part 15 Class A, CE Compliant, RoHS (2011/65/EU & 2015/863), EU REACH (1907/2006), California Proposition 65, NIST Certified Encryption
Warranty	The product is warranted free from defects in material and workmanship under normal use and service with proper maintenance for one year from the date of factory shipment.

1 For UL, the Power Sourcing Equipment (PSE) such as a PoE or PoE+ enabled network switch and or PoE or PoE+ power injectors must be UL Listed under UL 294B

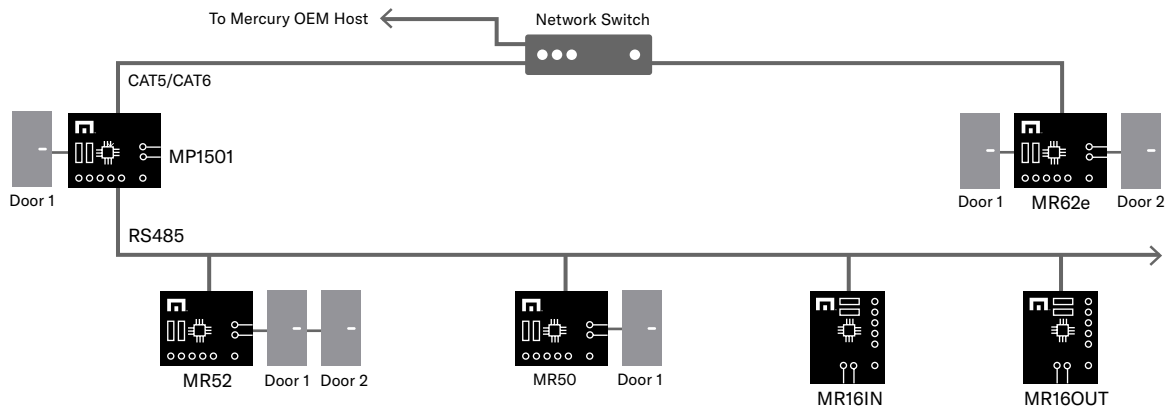

part of HID

© 2026 HID Global Corporation, part of ASSA ABLOY. All trademarks are owned by HID Global Corporation, ASSA ABLOY and/or their respective owners and may not be used without permission. All rights reserved.
2026-10-19-pacs-mercury-MP1501-ds-en