Mercury™ MP4502 Controller

Installation and Specifications

PLT-07612, A.3
January 2025

Copyright

© 2025 HID Global Corporation/ASSA ABLOY AB. All rights reserved.

This document may not be reproduced, disseminated or republished in any form without the prior written permission of HID Global Corporation.

Trademarks

HID GLOBAL, HID, the HID Brick logo, and Mercury are trademarks or registered trademarks of HID Global, ASSA ABLOY AB, or its affiliate(s) in the US and other countries and may not be used without permission. All other trademarks, service marks, and product or service names are trademarks or registered trademarks of their respective owners.

Contacts

For technical support, please visit: **https://support.hidglobal.com**.

What's new

Date	Description	Revision
January 2025	Added 2.1.2 J1501 and J1502 OSDP termination jumpers.	A.3

A complete list of revisions is available in **Revision history**.

Mercury

Section 01

Overview

1.1 MP4502 Intelligent controller with two reader interfaces

The MP4502 intelligent controller provides decision making, event reporting, and database storage for the Mercury hardware platform. Two reader interfaces provide control for two doors.

Host communication is via the on-board 10Base T/100Base-TX Ethernet port, or the Micro USB port (2.0) with an optional Micro USB to Ethernet adapter.

Two physical barriers can be controlled with the MP4502. Each reader port can accommodate a read-head that utilizes TTL (D1/D0, Clock/Data), F/2F or 2-wire RS-485 electrical signaling (OSDP reader for example) and also provides tri-state LED control and buzzer control (one wire LED mode only).

Four Form-C relay outputs are provided for door strike control or alarm signaling.

Eight inputs are provided for monitoring the door contacts, exit push buttons, and alarm contacts. Input circuits can be configured as unsupervised or supervised.

The MP4502 requires 12 to 24 V DC for power.

1.2 MP4502 hardware

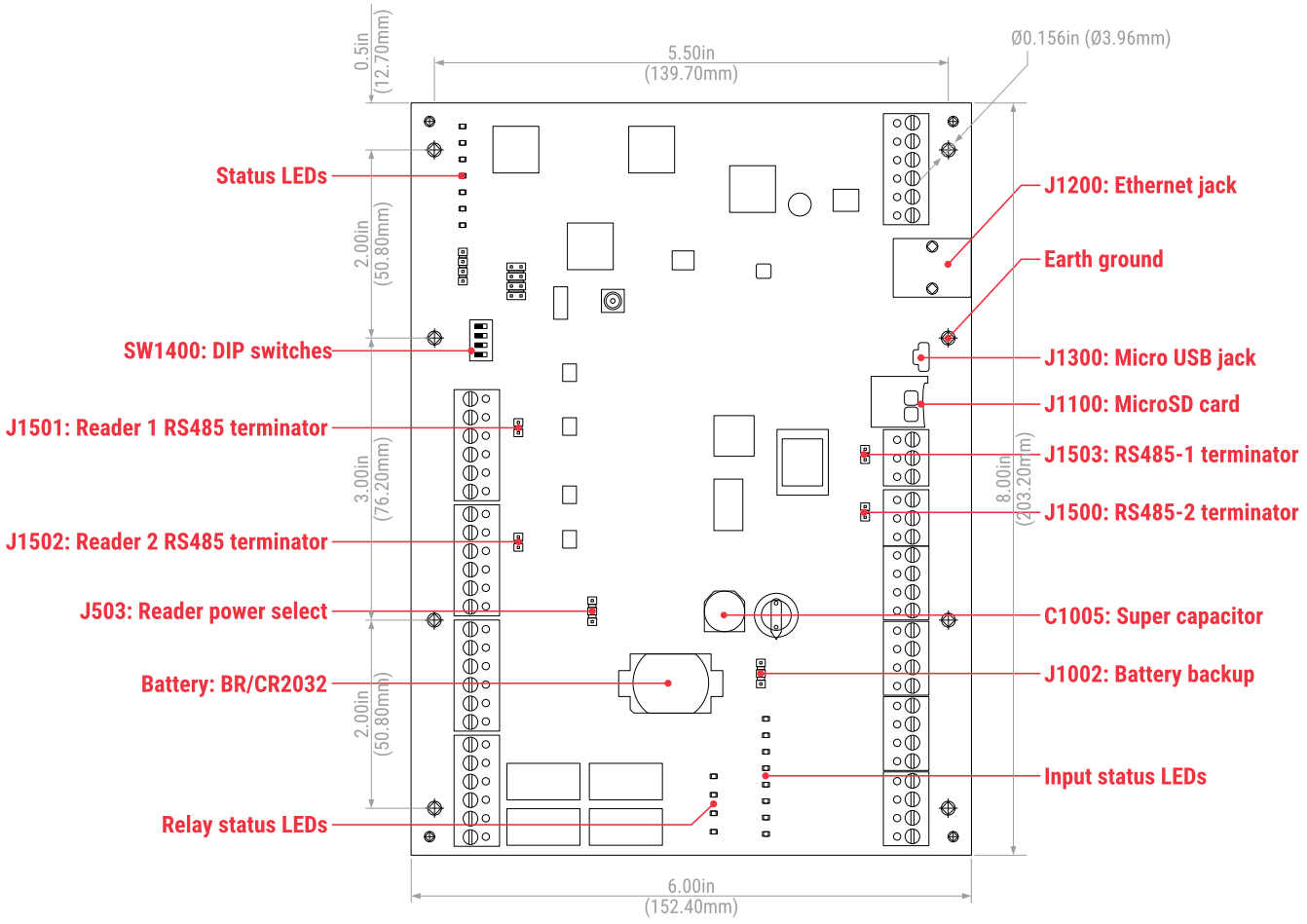

Section 02

MP4502 wiring and setup

2.1 MP4502 connections

TB300-1	GND	Power fault input
TB300-2	FLT	
TB300-3	GND	Cabinet tamper input
TB300-4	TMP	
TB300-5	GND	Power input
TB300-6	VIN: 12 to 24 V DC	

TB1501-1	GND	SIO port 1 (2-wire RS-485)
TB1501-2	TR- (B)[1]	
TB1501-3	TR+ (A)[1]	
TB1500-1	GND	SIO port 2 (2-wire RS-485)
TB1500-2	TR- (B)[1]	
TB1500-3	TR+ (A)[1]	

TB1703-1	IN2	Input 2
TB1703-2	IN2	
TB1703-3	IN1	Input 1
TB1703-4	IN1	

TB1701-1	IN4	Input 4
TB1701-2	IN4	
TB1701-3	IN3	Input 3
TB1701-4	IN3	

TB1705-1	IN6	Input 6
TB1705-2	IN6	
TB1705-3	IN5	Input 5
TB1705-4	IN5	

TB1707-1	IN8	Input 8
TB1707-2	IN8	
TB1707-3	IN7	Input 7
TB1707-4	IN7	

TB1603-1	GND	Reader 1 - Ground
TB1603-2	DAT/D0	Reader 1 - Data/Data 0/TR- (A)[1]
TB1603-3	CLK/D1	Reader 1 - Clock/Data 1/TR+ (B)[1]
TB1603-4	BZR	Reader 1 - Buzzer
TB1603-5	LED	Reader 1 - LED
TB1603-6	VO	Reader 1 - Power

TB1601-1	GND	Reader 2 - Ground
TB1601-2	DAT/D0	Reader 2 - Data/Data 0/TR- (A)[1]
TB1601-3	CLK/D1	Reader 2 - Clock/Data 1/TR+ (B)[1]
TB1601-4	BZR	Reader 2 - Buzzer
TB1601-5	LED	Reader 2 - LED
TB1601-6	VO	Reader 2 - Power

TB1800-1	NO	Out 1 - Normally open contact
TB1800-2	C	Out 1 - Common
TB1800-3	NC	Out 1 - Normally closed contact
TB1800-4	NO	Out 2 - Normally open contact
TB1800-5	C	Out 2 - Common contact
TB1800-6	NC	Out 2 - Normally closed contact

TB1802-1	NO	Out 3 - Normally open contact
TB1802-2	C	Out 3 - Common contact
TB1802-3	NC	Out 3 - Normally closed contact
TB1802-4	NO	Out 4 - Normally open contact
TB1802-5	C	Out 4 - Common contact
TB1802-6	NC	Out 4 - Normally closed contact

1. Terms A & B are from the RS-485 standard.

2.1.1 Jumpers and jacks

The MP4502 processor hardware interface is configured using jumpers to setup the reader port power and end of line termination.

Jumpers	Set at	Description
J1200	N/A	10 Base-T/100Base-Tx Ethernet connection (Port 0)
J1503	OFF	Port 1 RS-485 EOL terminator is OFF
	ON	Port 1 RS-485 EOL terminator is ON
J1500	OFF	Port 2 RS-485 EOL terminator is OFF
	ON	Port 2 RS-485 EOL terminator is ON
J1501	OFF	Reader 1 RS-485 EOL terminator is OFF (Non-OSDP readers)
	ON	RS-485 EOL terminator is ON (OSDP readers)
J1502	OFF	Reader 2 RS-485 EOL terminator is OFF (Non-OSDP readers)
	ON	RS-485 EOL terminator is ON (OSDP readers)
J1300	N/A	Micro USB port (2.0)
J503	**Reader power select. See caution below.**	
	12V	12 V DC at reader ports.
	PASS	VIN "Pass Through" to reader ports.
J1100	N/A	microSD card
J1400-1	N/A	Remote Status LED #1.[1]
J1400-2	N/A	Remote Status LED #2.[1]
J1400-3	N/A	Remote Status LED #3.[1]
J1400-4	N/A	Remote Status LED #4.[1]
J1002	**Super capacitor or battery backup real time clock.**	
	OFF	Backup battery is OFF.
	ON	Backup battery is ON. Default J1002 link 1 and 2 super capacitor real time clock back up. Link 2 and 3 battery back up. See Memory and real time clock backup battery

1. Observe polarity connection to LED. External current limiting is not required.

Caution: Install jumper J503 link 1 and 2 when input voltage (VIN) is greater than 17 V DC for 12 V regulated reader output.

2.1.2 J1501 and J1502 OSDP termination jumpers

The J1501 and J1502 jumpers are located next to the reader ports and control OSDP termination. Each jumper should be closed when an OSDP reader is used on the respective port. When using a non-OSDP reader the jumper should be open.

Important: Failure to properly set the OSDP termination jumper could cause reader communication issues.

2.2 DIP switches

The four switches on S1 DIP switch configure the operating mode of the MP4502 processor.

DIP switches are read on power-up except where noted. Pressing reset switch S2 causes the MP4502 to reboot.

1	2	3	4	Definitions
OFF	OFF	OFF	OFF	Normal operating mode.
ON	X	OFF	OFF	After initialization, enable default User Name (admin) and Password (password). The switch is read on the fly, a re-boot is not required. See IT security for additional information.
OFF	ON	OFF	OFF	Use factory default communication parameters.
ON	ON	OFF	OFF	Use OEM default communication parameters. Contact system manufacture for details. See Bulk erase configuration memory.
ON	ON	OFF	OFF	Bulk Erase prompt mode at power up. See Bulk erase configuration memory.
X	X	X	ON	Makes the MP4502 report and function like an LP4502. To be used in situations where the host software has not been updated to support the MP series product line.

Note:
- All other switch settings are unassigned and are reserved for future use.
- X = It doesn't matter if the switch is on or off.

Caution: In the factory or OEM default modes, downloaded configuration/database is not saved to flash memory.

2.3 Factory default communication parameters

Interface 1 (NIC1)

Network: static IP address	192.168.0.251
Subnet mask	255.255.0.0
Default gateway	192.168.0.1
DNS server	192.168.0.1
Primary host port	IP server, Data security: TLS if Available, port 3001, communication address: 0
Alternate host port	Disabled

2.4 Bulk erase configuration memory

The bulk erase function can be used for the following:

- Erase all configuration and cardholder database (sanitize board, less third party applications).
- Update OEM default parameters after OEM code has been changed.
- Recover from database corruption causing the MP4502 board to continuously reboot.

Note: If clearing the memory does not correct the initialization problem, contact Tech Support (**TechSupport@Mercury-Security.com**).

2.4.1 Bulk erase steps

1. Set SW1400 DIP switches 1 and 2 to **ON**, and 3 and 4 to **OFF**.
2. Apply power to the MP4502 board. LED 1 will flash during panel boot up.
3. After bootup is complete, LEDs 1 and 2, and LEDs 3 and 4 start flashing back and forth alternately at a rate of 0.5 seconds. Within 10 seconds of this beginning, change DIP switch 1 to **OFF**.
4. When complete, only LEDs 1 and 4 will flash for about three seconds.
5. The MP4502 board will restart the boot process and be available at the default IP address of 192.168.0.251.



Caution: Do not remove power during the bulk erase process.

HID GLOBAL CONFIDENTIAL AND PROPRIETARY INFORMATION. Use and disclosure of this information is strictly restricted by the terms of a non-disclosure agreement with HID Global Corporation. If you have received this information and are not an intended recipient or are not subject to or do not agree to be bound by the terms of the non-disclosure agreement, please immediately return this document to HID Global Corporation, 611 Center Ridge Dr. Austin, TX 78753.

2.5 Input power, cabinet tamper and UPS fault input wiring

The MP4502 requires 12-24 V DC power. Locate power source as close to the unit as possible.

Caution:
- Connect power with minimum of 18 AWG wire. Connect the GND signal to earth ground in only ONE LOCATION within the system! Multiple earth ground connections may cause ground loop problems and is not advised.
- Observe POLARITY on 12-24 V DC input!

There are two dedicated inputs for cabinet tamper and UPS fault monitoring. Normal (safe) condition is a closed contact. If these inputs are not used, install a jumper wire.

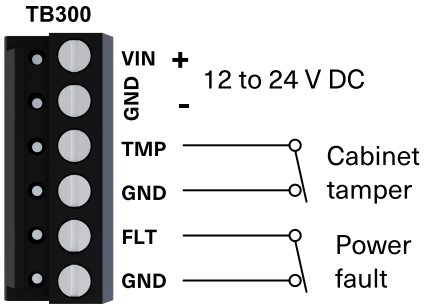

2.6 Communication wiring

The MP4502 controller communicates with the host via the on-board Ethernet 10-BaseT/100Base-TX port and/or the Micro USB port (2.0) with an optional Micro USB to Ethernet adapter.

The serial I/O device communication ports, TB1501 for port 1 and TB1500 for port 2, are 2-wire RS-485 interface which can be used to connect additional I/O panels. The interface allows multi-drop communication on a single bus of up to 4,000 feet (1,219 m). Use 1-twisted pair, shielded cable, 120Ω impedance, 24 AWG, 4,000 ft. (1,219 m) maximum for communication.

Caution: 120Ω end-of-line termination should be added **ONLY** at each end of the RS-485 bus. If the MP4502 is at one end of the RS-485 bus, jumper J1503 (Port 1) or J1500 (Port 2) can be installed for termination.

Port 1 to serial I/O devices

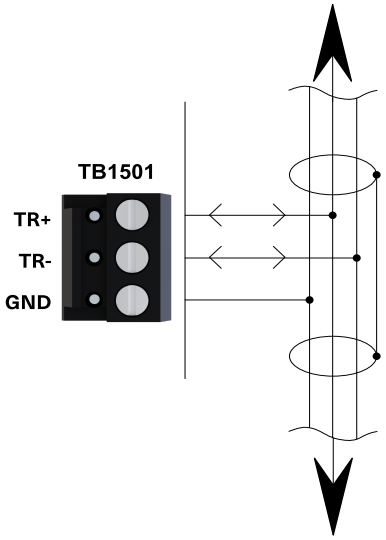

Port 2 to serial I/O devices

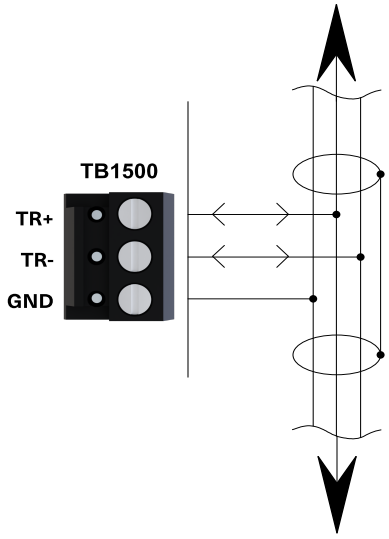

2.7 Reader wiring

Each reader port supports a reader with TTL (D1/D0, Clock/Data), F/2F (standard or supervised), or 2-wire RS-485 signaling (OSDP reader for example). Power to the reader is selectable: 12 V DC, or power is passed-through (PASS) from the input voltage of the MP4502 (TB300 VIN) and is current limited to 600 mA for each reader port. Readers that require different voltage or have high current requirements should be powered separately. Refer to the reader manufacture specifications for cabling requirements. In the 2-wire LED mode the Buzzer output is used to drive the second LED. Reader port configuration is set via the host software. Do not terminate any RS-485 devices connected to a reader port.

To fully utilize each reader port:

- TTL signaling requires a 6-conductor cable (18 AWG)
- F/2F signaling requires a 4-conductor cable
- RS-485 signaling requires two 2-conductor cables. Use one cable for power (18 AWG, 1-pair) and one cable for communication (24 AWG, 1-pair, shielded)

Note: Data 0 and Data 1 wires for Wiegand may be reused for OSDP. However, standard Wiegand cable may not meet RS-485 twisted pair recommendations. The reuse of cable works best on shorter cable lengths at lower data rates.

Important: Failure to correctly set the OSDP jumper settings can cause communication issues

J503 – Reader power select

12V PASS	Reader power
	12 V DC is available on reader ports (VIN> 17 V DC)
	VIN power is "passed through" to reader ports



Caution: For 12 V regulated reader output install jumper J501 link 1 and 2 and ensure that the input voltage is greater than 17 V.

Note:

- With jumper J503 Link 1 and 2 fitted the reader output can be regulated or pass-through automatically depending on the input voltage:
  - VIN 26.4V to 17V = 12V Output
  - VIN 17V to 14.5V = Output OFF
  - VIN 14.5V to 10.8V = Pass-through
- Install jumper J503 link 2 and 3 for pass-through from 26.4 V to 10.8 V.
- Ensure the pass-through voltage does not exceed reader maximum operating voltage.

Input power	Reader power select	Reader output
24 V DC	Pass-through	24 V DC
24 V DC	12 V PASS	12 V DC
12 V DC	Pass-through	12 V DC
12 V DC	12 V PASS	12 V DC

2.7.1 Reader wiring diagrams

Typical reader 1
(OSDP installation)

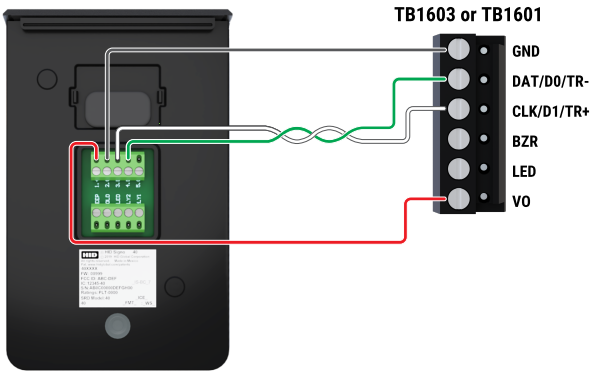

Typical reader 1
(Wiegand or Clock/Data installation)

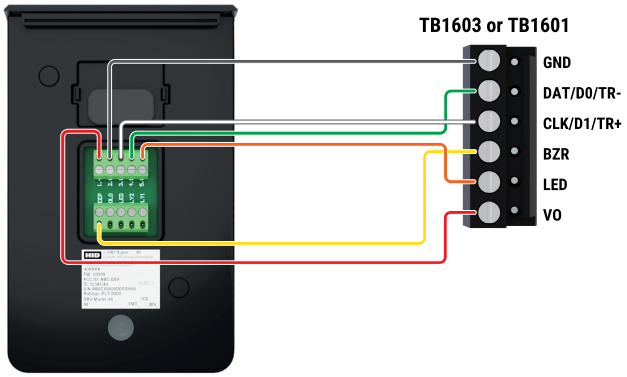

Typical reader 2
(OSDP installation)

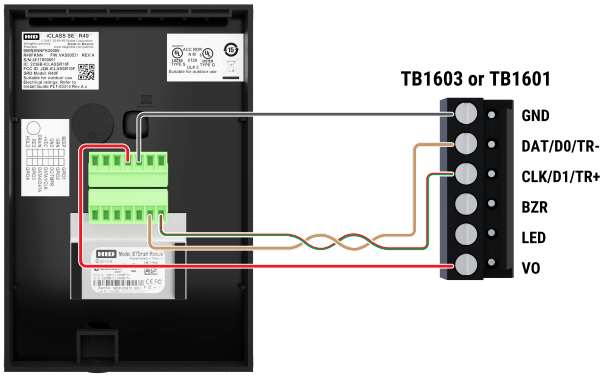

Typical reader 2
(Wiegand or Clock/Data installation)

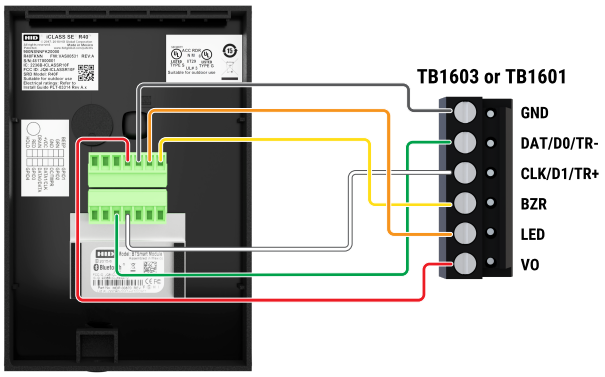

OSDP Multi drop reader port 1 and 2

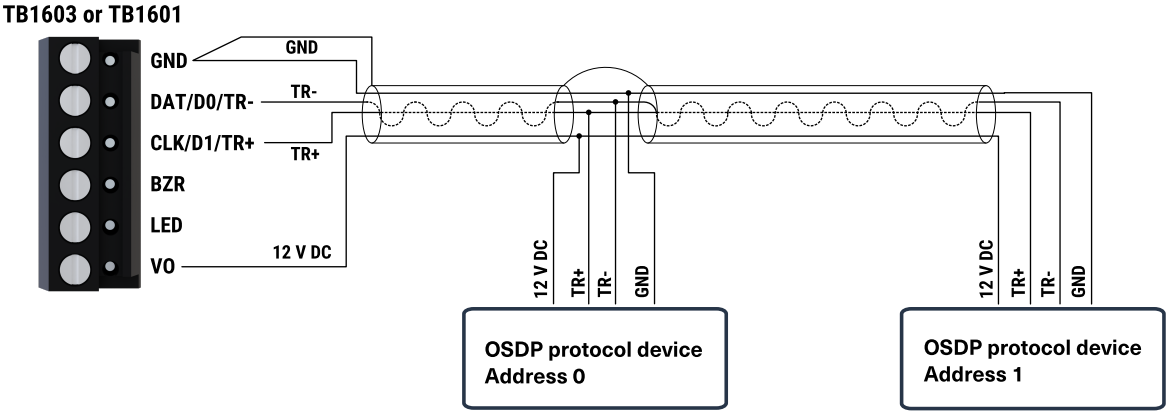

Note:

- For OSDP communication a 120Ω end-of-line termination should only be added at each end of the RS-485 bus. If the device is at one end of the RS-485 bus, jumper J1501 (reader port 1) or J1502 (reader port 2) can be installed to to enable the termination resistor.
- Refer to the appropriate OSDP installation manual for address and baud rate settings.
- A maximum of two OSDP devices can be connected to a reader port in multi drop installations.

Typical unsupervised F/2F reader

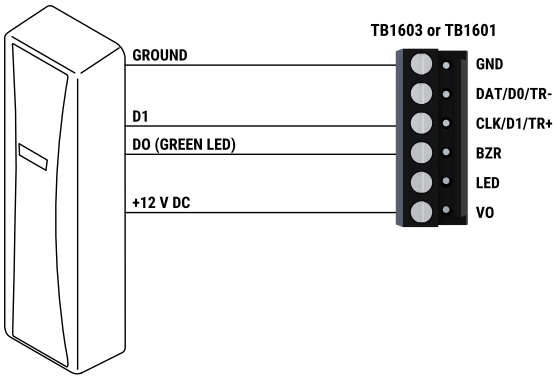

Typical supervised F/2F reader

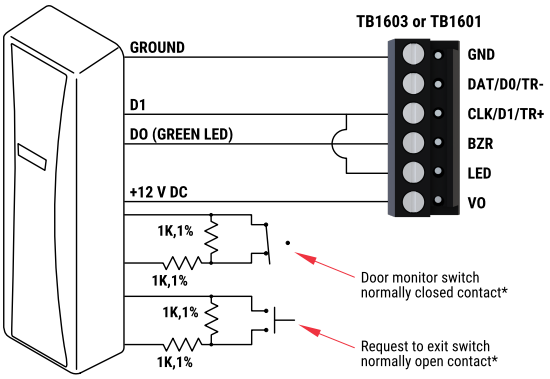

Jumper D1 to LED on supervised F/2F reader

*Inputs on supervised F/2F readers may be unsupervised or supervised (supervised shown).

2.8 Input circuit wiring

There are eight inputs that are typically used to monitor door position, request to exit, or alarm contacts. Input circuits can be configured as unsupervised or supervised.

When unsupervised, reporting consists of only the open or closed states. When configured as supervised, the input circuit will report not only open and closed, but also open circuit, shorted, grounded, and foreign voltage.

> **Note:** Grounded and foreign voltage states are not a requirement of UL 294 and therefore not verified by UL.

A supervised input circuit requires two resistors be added to the circuit to facilitate proper reporting. The standard supervised circuit requires 1kΩ, 1% resistors and should be located as close to the sensor as possible. Custom end of line (EOL) resistances may be configured via the host software.

The input circuit wiring configurations shown are supported but may not be typical:

Terminal blocks
TB1703 through TB1707

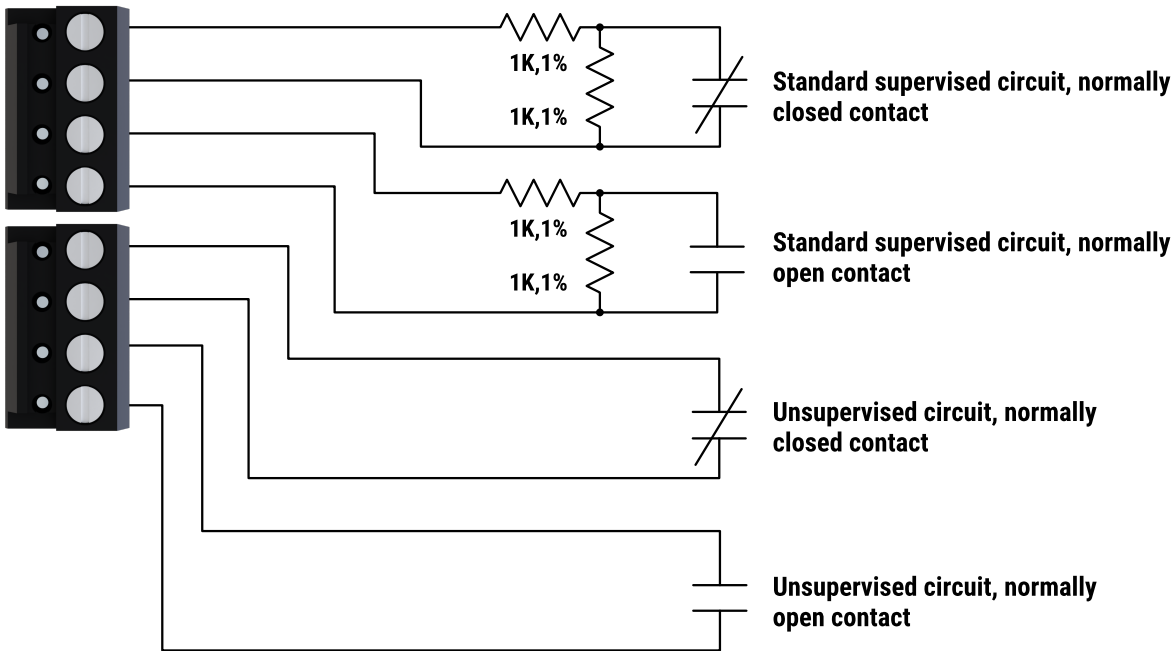

2.9 Relay circuit wiring

Four relays with Form-C contacts (dry) are provided for controlling door lock mechanisms or alarm signaling. Each relay has a Common pole (**C**), a Normally Open pole **(NO**) and a Normally Closed pole (**NC**). When controlling the delivery of power to the door strike, the Normally Open and Common poles are typically used. When momentarily removing power to unlock the door, as with a mag lock, the Normally Closed and Common poles are typically used. Check with local building codes for proper egress door installation.

Door lock mechanisms can generate feedback to the relay circuit that can cause damage and premature failure of the relay, and affect the operation of the MP4502. For this reason, it is recommended that a diode is used to protect the relay. Wire should be of sufficient gauge to avoid voltage loss.

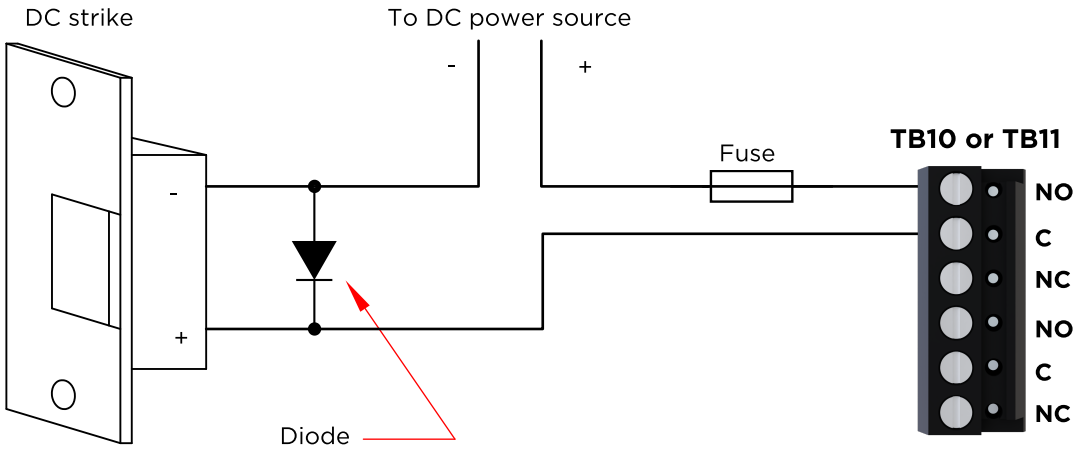

Diode selection

- Diode current rating: 1x strike current.
- Diode breakdown voltage: 4x strike voltage.
- For 12 V DC or 24 V DC strike, diode 1N4002 (100V/1A) typical.

2.10 Memory and real time clock backup battery

The real time clock is backed up by a super capacitor or optional lithium battery when power is interrupted. All other data is stored in non-volatile flash memory.

> **Note:** If using the optional lithium battery, this should be replaced annually.

Super capacitor is selected by default J1002 jumper link 1 and 2. To change to battery back up change jumper link to 2 and 3 and fit lithium coin cell.

Battery type: BR2032 or CR2032.

> **Note:** Data is stored in flash memory to prevent loss of data in the case of power interruption.

2.11 Status LEDs

2.11.1 Power-up

NIC LED blinks and all other LEDs are off.

2.11.2 Initialization

The initialization process has several stages, each stage is represented by a different LED pattern in the following sequence:

- LED 1 is on for about 10 seconds.
- LED 2 is on for 25 seconds.
- LED 3 flashes slowly for 15 seconds.
- LED 3 flashes quickly for 1 second. LED 3 may continue flashing for an additional 60 seconds if the controller firmware is being updated.
- LED 1, LED 2, and LED 3 are off as the application starts.
- LED 4 is then on for 15 seconds indicating a successful initialization.

The amount of time the application takes to initialize depends on the size of the database, but is typically about one second without a card database. Each 10,000 cards will add about two seconds to the application initialization. When LEDs 1, 2, 3, and 4 flash at the same time, data is being read from or written to flash memory, do not cycle power when in this state. If the sequence stops or repeats, perform the bulk erase procedure, see **Bulk erase configuration memory**.

2.11.3 Running

After initialization is complete, the LEDs have the following meanings:

LED	Description
1	Off-line / On-line and battery status
	Off-line = 20% ON, On-line = 80% ON
	Double flash if battery is low
2	Host communication activity (Ethernet)
3	Internal SIO communication activity
4	External SIO communication activity (Port 1)
5	External SIO communication activity (Port 2)
R1	**Reader 1:** Clock/Data or D1/D0 Mode = Flashes when data is received, either input. F/2F mode: Flashes when data/acknowledgment is received RS-485 mode = Flashes when transmitting data
R2	**Reader 2:** Clock/Data or D1/D0 Mode = Flashes when data is received, either input. F/2F mode: Flashes when data/acknowledgment is received RS-485 mode = Flashes when transmitting data
ETH-ACT	D1200 flashes with Ethernet traffic
YEL	Ethernet speed: OFF = 10Mb/S, ON = 100Mb/S
GRN	OFF = No link, ON = Good link, Flashing = Ethernet activity
IN1	Input IN1 status: OFF = Inactive, ON = Active, Flash = Fault[1]
IN2	Input IN2 status: OFF = Inactive, ON = Active, Flash = Fault[1]

LED	Description
IN3	Input IN3 status: OFF = Inactive, ON = Active, Flash = Fault[1]
IN4	Input IN4 status: OFF = Inactive, ON = Active, Flash = Fault[1]
IN5	Input IN5 status: OFF = Inactive, ON = Active, Flash = Fault[1]
IN6	Input IN6 status: OFF = Inactive, ON = Active, Flash = Fault[1]
IN7	Input IN7 status: OFF = Inactive, ON = Active, Flash = Fault[1]
IN8	Input IN8 status: OFF = Inactive, ON = Active, Flash = Fault[1]
OUT1	Relay K1: ON = Energized
OUT2	Relay K2: ON = Energized
OUT3	Relay K3: ON = Energized
OUT4	Relay K4: ON = Energized

1. If this input is defined, every three seconds the LED is pulsed to its opposite state for 0.1 seconds, otherwise, the LED is off.

2.12 IT security

Ensure that the MP4502 is installed securely. Create user accounts to the web configuration page using secure passwords.

Ensure all DIP switches are to be in the **OFF** position for the normal operating mode.

The MP4502 is shipped from the factory with a default login account, which is enabled when DIP 1 is moved from **OFF** to **ON** (See DIP switches). The default login user name (admin) and password (password) will be available for five minutes once the DIP switch is toggled. It is therefore important that at least one user account is defined, and the DIP switches are set to **OFF** before the MP4502 is commissioned.

Configuring the MP4502 with an IP address that is accessible from the public is **not** recommended.

The following options are available for enhanced network security:

- Disable SNMP.
- Zeroconf discovery.
- The web configuration module.
- Enable data encryption over the host communication port.

Mercury

Section 03

Specifications

3.1 MP4502 controller specifications

The MP4502 is for use in low voltage, Class 2 Circuits only.

The installation of this device must comply with all local fire and electrical codes. Units are to be installed in accordance to NFPA 70. UL verified 12 to 24 V DC. The unit is to be powered with a UL listed UL 294 approved power supply with a class 2 power limited output.

Primary power	12 to 24 V DC ± 10 %, 550 mA maximum (reader and USB current not included)
Reader ports	600 mA maximum (add 600 mA to primary power current)
Micro USB port	5 V DC, 500 mA maximum (add 270 mA to primary power current) Not evaluated by UL
Memory and clock backup battery	Super capacitor or optional 3 Volt Lithium, type BR2032 or CR2032
microSD card	Format: microSD or microSDHC; 2GB to 8GB.
Host communication	Ethernet: 10Base T/100Base-TX and micro USB port (2.0) with optional adapter: pluggable model USB2-OTGE100
Serial I/O device	Two each: 2-wire RS-485, 2,400 to 115,200 bps, asynchronous, half-duplex, 1 start bit, 8 data bits, and 1 stop bit
Inputs	Eight unsupervised/supervised, standard EOL: 1k/1kΩ, 1%, ¼ watt
	Two unsupervised dedicated for cabinet tamper and UPS fault monitoring
Output	Four relays, Form-C with dry contacts: Normally open contact (NO): 5 A @ 30 V DC resistive Normally closed contact (NC): 3 A @ 30 V DC resistive
READER INTERFACE	
Power (jumper selectable)	12 V DC ± 10% regulated, 600 mA maximum each reader port (input voltage (VIN) must be greater than 17 V DC)
	or
	12 to 24 V DC ± 10% (input voltage (VIN) passed through), 600 mA max per reader port
Data inputs	TTL compatible, F/2F or 2-wire RS-485
RS-485 mode	9,600 to 115,200 bps, asynchronous, half-duplex, 1 start bit, 8 data bits, and 1 stop bit. Maximum cable length: 2000 ft. (609.6 m)
LED output	TTL levels, high>3 V, Low<0.5 V, 5 mA source/sink maximum
Buzzer output	Open collector, 12 V DC open circuit maximum, 40 mA sink maximum

CABLE REQUIREMENTS	
Power	1 twisted pair, 18 AWG (when using local 12 V DC power supply)
Ethernet	CAT-5, minimum
Reader data (TTL)	6-conductor, 18 AWG, 500 feet (152 m) maximum
Reader data (F/2F)	4-conductor, 18 AWG, 500 feet (152 m) maximum
Reader data (RS-485)	1 twisted pair, shielded. 24 AWG, 120Ω impedance, 2000 feet (610 m) maximum
Alarm input	1 twisted pair per input, 30Ω maximum
Outputs	As required for the load
ENVIRONMENTAL	
Storage temperature	-55 to +85°C
Operating temperature	0 to +70°C
Humidity	5 to 95% RHNC
MECHANICAL	
Dimension	8 inches (203.2 mm) W x 6 inches (152.4 mm) L x 1 inches (25 mm) H
Weight	10.65 oz. (302 g) nominal, board only

These specifications are subject to change without notice.

UL294 Performance Levels ULC 60839-11-1 Indoor use

Feature	Level
Standby Power	I
Endurance	IV
Line Security	I
Destructive Attack	I

The models described in the manual are recognized boards intended to be used with ULC 60839-11-1 enclosures, power supply readers, controllers, I/O boards, and an off premise monitoring station to form a grade 2 or higher system. Units maybe used in grade 4 system installations provided the full system with this board integrated is verified in the end use application. The boards mentioned have only been evaluated for their specific function for grade 2 requirements. For ULC 60839-11-1 an enclosure with a tamper is required and a reader and power supply is to be verified in the end product, as well as the operations need to be documented in the installation instructions.

3.2 Warranty

Mercury Security warrants the product is free from defects in material and workmanship under normal use and service with proper maintenance for one year from the date of factory shipment. Mercury Security assumes no responsibility for products damaged by improper handling or installation. This warranty is limited to the repair or replacement of the defective unit.

There are no expressed warranties other than set forth herein. Mercury Security does not make, nor intends, nor does it authorize any agent or representative to make any other warranties, or implied warranties, and expressly excludes and disclaims all implied warranties of merchantability or fitness for a particular purpose.

Returns must be accompanied by a Return Material Authorization (RMA) number obtained from customer service, and prepaid postage and insurance.

3.3 Liability

The Interface should only be used to control exits from areas where an alternative method for exit is available. This product is not intended for, nor is rated for operation in life-critical control applications. Mercury Security is not liable under any circumstances for loss or damage caused by or partially caused by the misapplication or malfunction of the product. Mercury Security's liability does not extend beyond the purchase price of the product.

3.4 Regulatory

This device complies with part 15 of the FCC Rules. Operation is subject to the following two conditions: (1) This device may not cause harmful interference, and (2) this device must accept any interference received, including interference that may cause undesired operation.

Revision history

Date	Description	Revision
January 2025	Added 2.1.2 J1501 and J1502 OSDP termination jumpers.	A.3
October 2024	Minor update to bulk erase configuration memory. Changed backup battery model from BR/CR 2330 to BR/CR 2032.	A.2
August 2024	Updates to 2.11 Status LEDs	A.1
May 2024	Initial release.	A.0

Mercury™

part of HID

© 2025 HID Global Corporation/ASSA ABLOY AB. All rights reserved.

PLT-07612, Rev. A.3

Part of ASSA ABLOY

For technical support, please visit: https://support.hidglobal.com